OWNER'S MANUAL

MODELS:

MJ ✦ MH ✦ HMJ

INDUSTRIAL DUTY DOOR OPERATOR

FACTORY SET

C2 Wiring

See page 8 for other wiring configurations

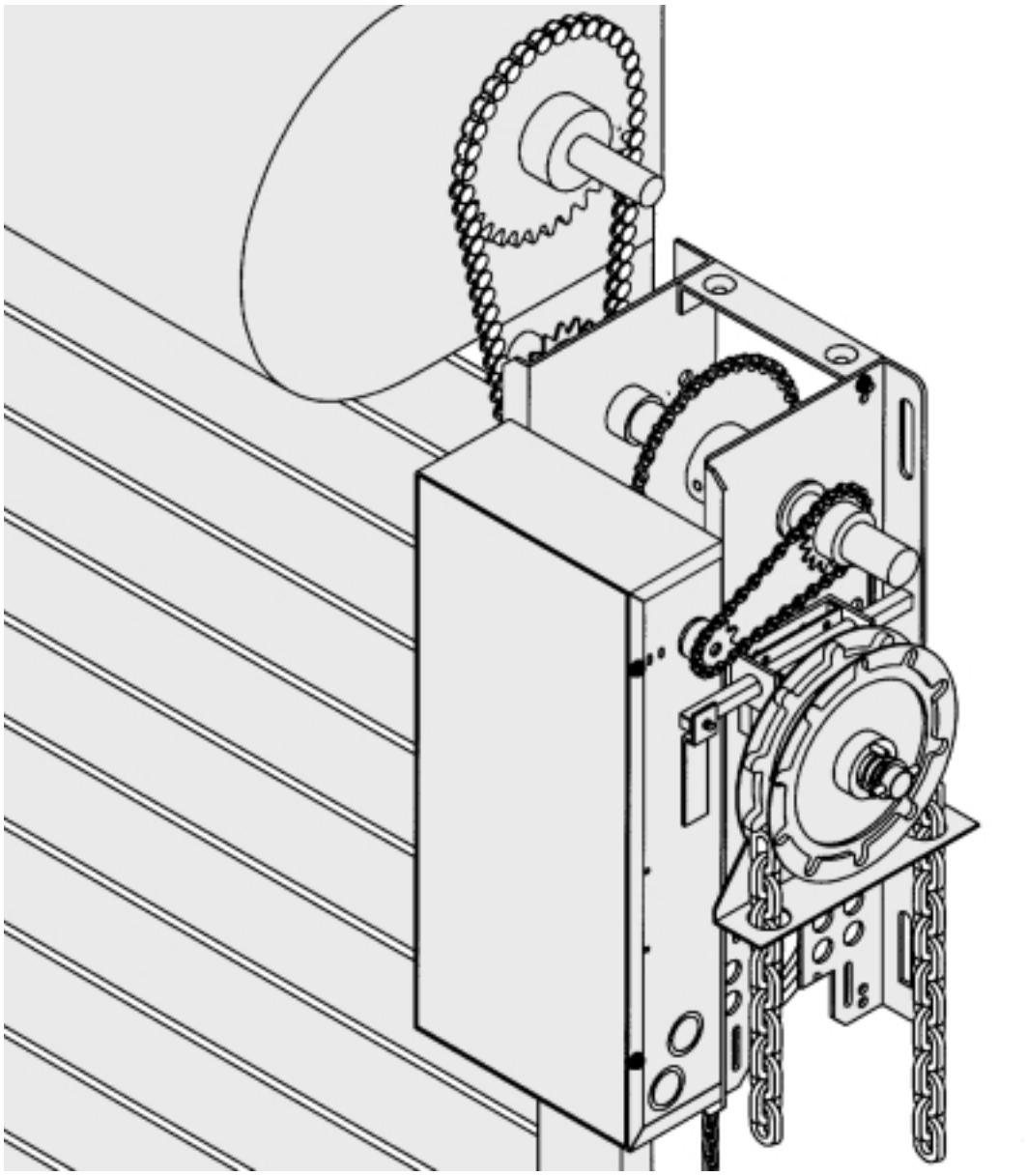

2 YEAR WARRANTY

Serial # _____
(located on electrical box cover)

Installation Date _____

Wiring Type _____

NOT FOR RESIDENTIAL USE

41B6

C UL US

LISTED DOOR OPERATOR

SPECIFICATIONS

MOTOR

TYPE: .....Intermittent duty

HORSEPOWER: .....1/2 Horsepower

SPEED:.....1000 RPM

VOLTAGE: .....115V, 1 Phase, 60Hz
230V, 1 Phase, 50Hz

CURRENT: .....See motor nameplate

ELECTRICAL

TRANSFORMER:.....24VAC

CONTROL STATION: .....NEMA 1 three button station. OPEN/CLOSE/STOP

WIRING TYPE:.....C2 (Factory Shipped) Momentary contact to OPEN & STOP, constant pressure to CLOSE, open override plus wiring for sensing device to reverse. See pages 13 and 14 for optional control settings and operating modes.

LIMIT ADJUST:.....Linear driven, fully adjustable screw type cams. Adjustable to 24 feet.

MECHANICAL

DRIVE REDUCTION:.....Primary: Heavy duty (4L) V-Belt. Secondary: #48 chain/sprocket. Output: #48 chain

OUTPUT SHAFT SPEED: .....80 R.P.M.

DOOR SPEED: .....approx. 9” per sec. depending on door

BRAKE (Optional): .....Solenoid actuated disc brake

BEARINGS: .....IronCopper sintered and oil impregnated.

HAND CHAIN WHEEL: .....Left or right handing ***Models MH and HMJ only.***

SAFETY

DISCONNECT :

Model MJ: Floor level disconnect for emergency manual door operation.

Model MH: Floor level chain hoist with electrical interlock for emergency manual door operation.

Model HMJ: Includes both floor level disconnect systems described above.

REVERSING EDGE: .....(Optional) Electric or pneumatic sensing device attached to the bottom edge of door.

A REVERSING EDGE IS STRONGLY RECOMMENDED FOR *ALL* COMMERCIAL OPERATOR INSTALLATIONS. *REQUIRED* WHEN THE 3 BUTTON CONTROL STATION IS OUT OF SIGHT OF DOOR OR ANY OTHER CONTROL (AUTOMATIC OR MANUAL) IS USED.

WEIGHTS AND DIMENSIONS

HANGING WEIGHT: .....**80-110 LBS.**

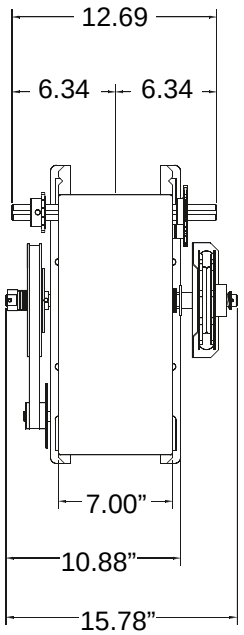

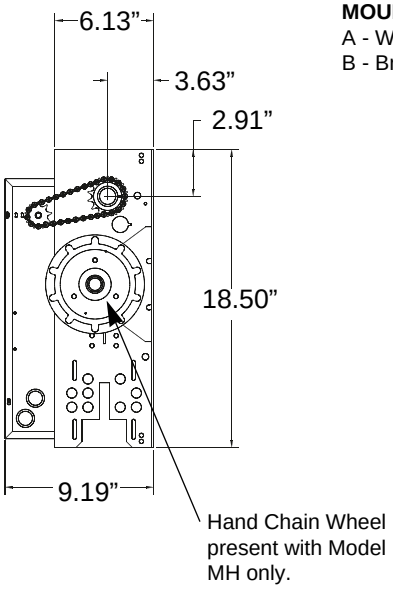

MOUNTING DIMENSIONS
A - Wall Mounting
B - Bracket Mounting (rolling door)

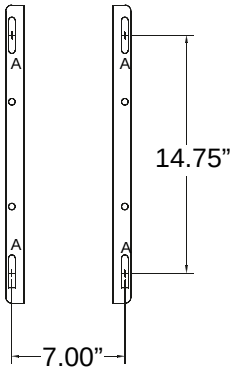

IMPORTANT SAFETY NOTES

CAUTION

TO AVOID DAMAGE TO DOOR AND OPERATOR, MAKE ALL DOOR LOCKS INOPERATIVE. SECURE LOCK(S) IN "OPEN" POSITION.

IF THE DOOR LOCK NEEDS TO REMAIN FUNCTIONAL, INSTALL AN INTERLOCK SWITCH.

DO NOT CONNECT ELECTRIC POWER UNTIL INSTRUCTED TO DO SO.

WARNING

KEEP DOOR BALANCED. STICKING OR BINDING DOORS MUST BE REPAIRED. DOORS, DOOR SPRINGS, CABLES, PULLEYS, BRACKETS AND THEIR HARDWARE MAY BE UNDER EXTREME TENSION AND CAN CAUSE SERIOUS PERSONAL INJURY. CALL A PROFESSIONAL DOOR SERVICEMAN TO MOVE OR ADJUST DOOR SPRINGS OR HARDWARE.

SITE PREPARATIONS

It is imperative that the wall or mounting surface provide adequate support for the operator.
This surface must:

a) Be rigid to prevent play between operator and door shaft.
b) Provide a level base.
c) Permit the operator to be fastened securely and with the drive shaft parallel to the door shaft.

The safety and wear of the operator will be adversely affected if any of the above requirements are not met.

For metal buildings, fasten 2” x 2” x 3/16” (or larger) angle iron frames to the building purlins. Retain 5-1/2” between frames. See Figure 1.

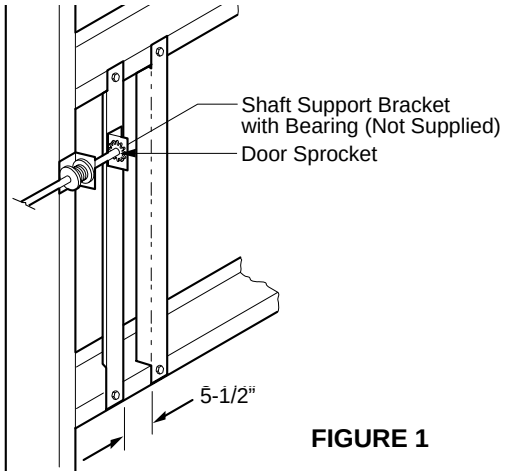

FIGURE 1

OPERATOR PREPARATION

All MJ, MH, and HMJ series operators have dual output shafts and may be mounted on either the right (standard) or left side of door, and in either a vertical (standard) or horizontal mounting position. If you need to move the drive sprocket, loosen BOTH set screws, remove the sprocket and key, and place on the opposite side of the drive shaft. Be sure to tighten BOTH set screws securely

Hand Chain Handing

For MH and HMJ models with manual hoist hand chain systems, the handing of the operator must be determined at the time of order. The handing is indicated by last letter of the model name (R or L). ***The hand chain wheel can not be switched on site.*** If your installation causes the hand chain to hang in the door opening, hook the chain off to the side near the top of the door jamb.

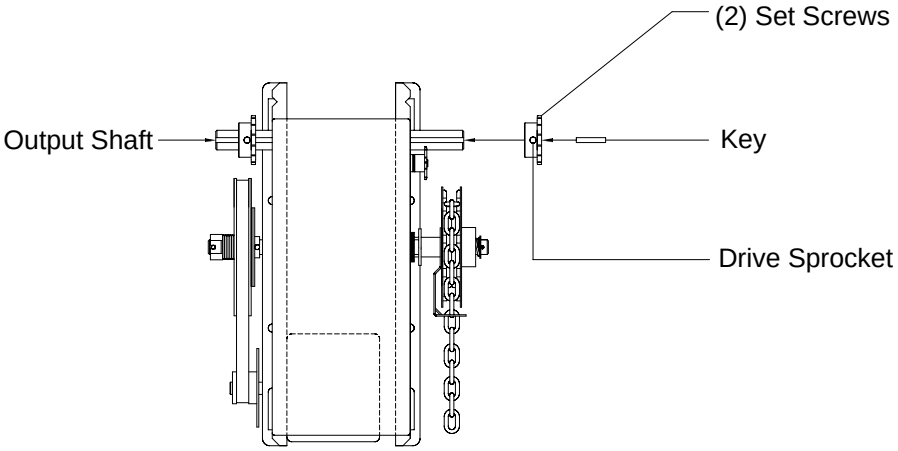

OPERATOR MOUNTING

Before your operator is installed, be sure the door has been properly aligned and is working smoothly. The operator may be wall mounted or mounted on a bracket or shelf. If necessary, refer to the operator preparations on page 3. Refer to the illustration and instructions below that suits your application.

1a. **Wall Mounting**
The operator should generally be installed below the door shaft, and as close to the door as possible. The optimum distance between the door shaft and operator drive shaft is between 12” - 15”. Refer to Figure 3.

1b. **Bracket or Shelf Mounting**
The operator may be mounted either above or below the door shaft. The optimum distance between the door shaft and operator drive shaft is between 12” - 15”. Refer to Figure 4.

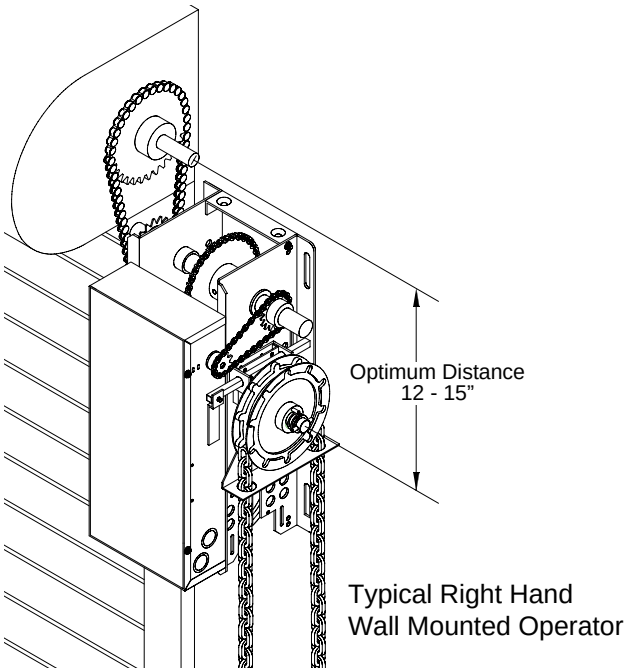

FIGURE 3

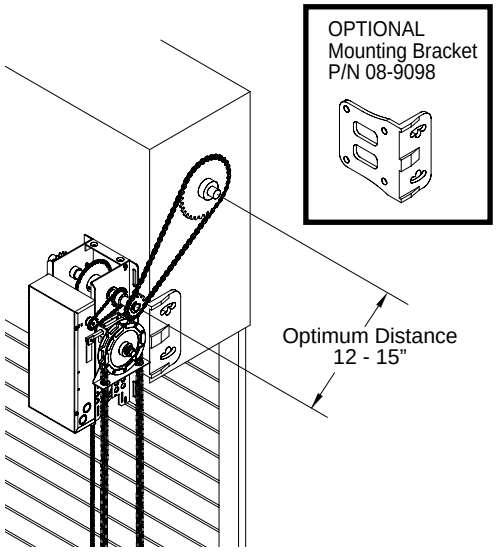

IMPORTANT: The shelf or bracket must provide adequate support, prevent play between operator and door shaft, and permit operator to be fastened securely and with the drive shaft parallel to the door shaft.

FIGURE 4

1c. Place door sprocket on the door shaft. Do not insert the key at this time.

2. Place drive sprocket on the appropriate side of the operator. Do not insert the key at this time.
3. Wrap drive chain around door sprocket and join roller chain ends together with master link.
4. Raise operator to approximate mounting position and position chain over operator sprocket.
5. Raise or lower operator until the chain is taut (not tight). Make sure the operator output shaft is parallel to door shaft and sprockets are aligned. When in position, secure the operator to wall or mounting bracket.
6. Align sprockets and secure, (see Figure 5).

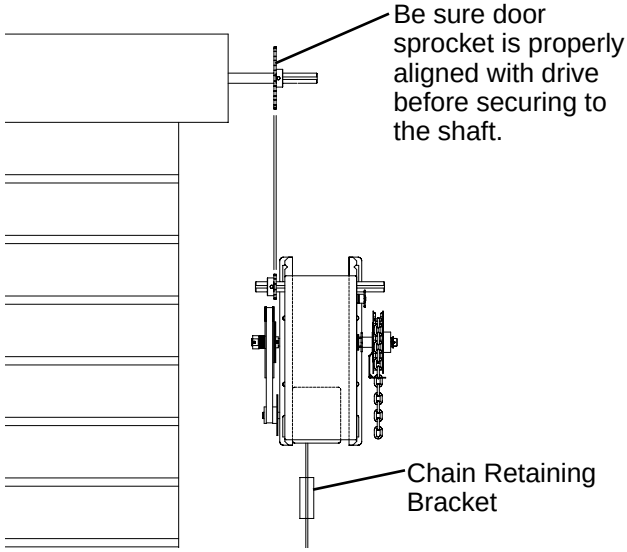

FIGURE 5

7. **Install Hand Chain (Models MH and HMJ only)**
   Place hand chain around hand chain wheel. Be sure to pass it through both openings in the chain guide. Remove enough links so chain hangs approximately two feet above the floor

8. **Mount Chain Keeper / Keyhole Bracket**
   Using suitable hardware mount the chain keeper approximately 4 feet above the floor, near the free hanging chain. Remove disconnect sash chain from bag and place the end through the keyhole in the the chain keeper. Remove excess links if necessary.

EMERGENCY MANUAL OPERATION

This operator has provisions for manually operating the door in case of emergency or power failure. Refer to the appropriate instructions below for your model operator.

Model MH

These operators are equipped with a manual hoist. An electrical interlock will disable the electrical controls when the hoist is used. To operate the hoist:

1. Pull the disconnect chain (small chain) to engage the hoist mechanism. The disconnect chain may be locked in position by slipping the end through the keyhole of the chain keeper mounted on the wall.

2. Operate the door in the desired direction by pulling on one side or the other of the continuous loop hoist chain (large chain).

3. The disconnect chain must be released from the chain keeper before the door will operate again electrically.

Model MJ

This operator has a floor level disconnect chain to disconnect the door from the door operator.

1. To disengage, pull the chain and secure in the disengaged position by slipping the end through the keyhole bracket mounted on the wall. Or if emergency egress device is used, pull handle to disengage operator from door.

2. The door may now be pushed up or pulled down manually. Release the disconnect chain to operate the door again electrically.

Model HMJ

This operator includes both a floor level disconnect chain to disconnect the door from the door operator and a disconnect chain with manual hoist to electrically disable the operator controls.

1. Refer to Model MH instructions above for hoist operation.

2. Refer to Model MJ instructions above for manual operation.

CAUTION

TURN OFF POWER TO THE OPERATOR BEFORE MANUALLY OPERATING YOUR DOOR.

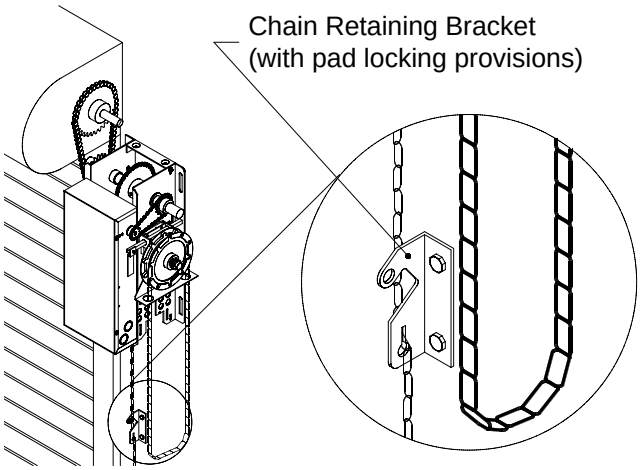

Electrical Interlock with Hoist for Models MH and HMJ

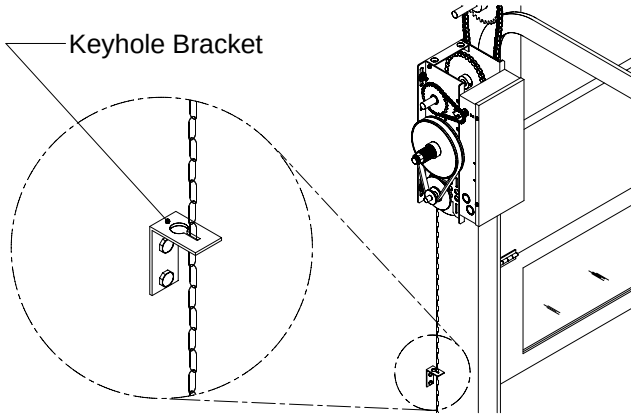

Manual Disconnect for Models MJ and HMJ

ENTRAPMENT PROTECTION ACCESSORIES (OPTIONAL)

SENSING EDGES

All types of sensing edges with an isolated normally open (N.O.) output are compatible with your operator. This includes pneumatic and electric edges. If your door does not have a bottom sensing edge and you wish to purchase one, contact the supplier of your operator.

If not pre-installed by the door manufacturer, mount the sensing edge on the door according to the instructions provided with the edge. The sensing edge may be electrically connected by either coiled cord or take-up reel. Refer to the steps below.

Important Notes:

a) Proceed with Limit Switch Adjustments before making any sensing edge wiring connections to operator as described below.

b) Electrician must hardwire the junction box to the operator electrical box in accordance with local codes.

IT IS STRONGLY RECOMMENDED THAT A SENSING EDGE OR OTHER ENTRAPMENT PROTECTION DEVICE BE USED IN CONJUNCTION WITH THIS OPERATOR.

WIRING:

For wiring of your sensing device to the operator, refer to the wiring diagram supplied with your operator. See field connection terminals identified as Sensing Device or Safety Edge.

TAKE-UP REEL: Take-up reel should be installed 12" above the top of the door.

COIL CORD: Connect operator end of coil cord to junction box (not supplied) fastened to the wall approximately halfway up the door opening.

LIMIT SWITCH ADJUSTMENT

MAKE SURE THE LIMIT NUTS ARE POSITIONED BETWEEN THE LIMIT SWITCH ACTUATORS BEFORE PROCEEDING WITH ADJUSTMENTS.

1. To adjust limit nuts depress retaining plate to allow nut to spin freely. After adjustment, release plate and ensure it seats fully in slots of both nuts.
2. To **increase** door travel, spin nut **away** from actuator. To **decrease** door travel, spin limit nut **toward** actuator.
3. Adjust open limit nut so that door will stop in open position with the bottom of the door even with top of door opening.
4. Repeat Steps 1 and 2 for close cycle. Adjust close limit nut so that actuator is engaged as door fully seats at the floor.

WARNING

TO AVOID SERIOUS PERSONAL INJURY OR DEATH FROM ELECTROCUTION, DISCONNECT ELECTRIC POWER BEFORE MANUALLY MOVING LIMIT NUTS.

If other problems persist, call our toll-free number for assistance - 1-800-528-2806.

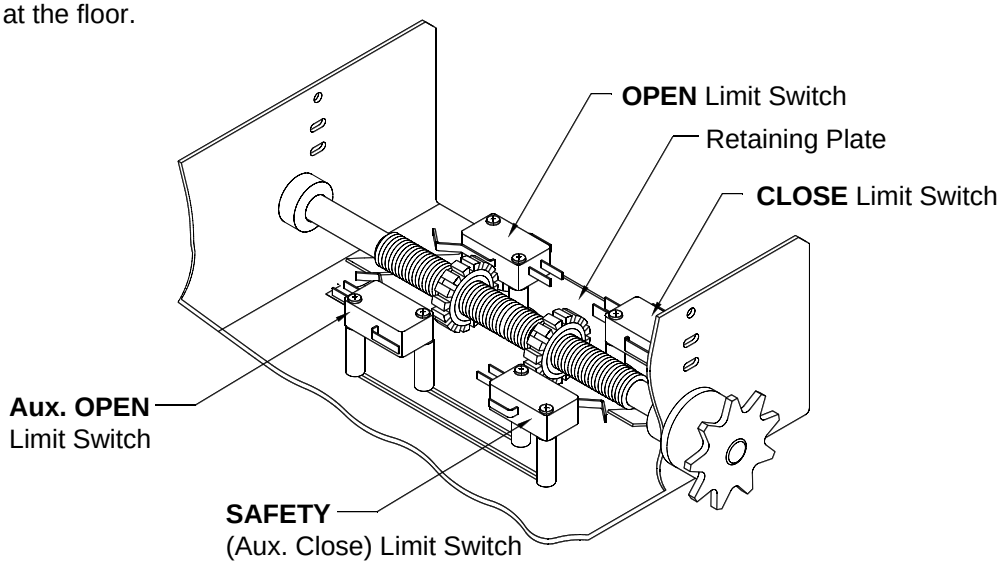

POWER WIRING CONNECTIONS

Remove the cover from the electrical enclosure. Inside this enclosure you will find the wiring diagram(s) for your unit. Refer to the diagram (glued on the inside of the cover) for all connections described below. If this diagram is missing, call the number on the back of this manual. DO NOT INSTALL ANY WIRING OR ATTEMPT TO RUN THIS OPERATOR WITHOUT CONSULTING THE WIRING DIAGRAM.

WARNING

DISCONNECT POWER AT THE FUSE BOX BEFORE PROCEEDING.

OPERATOR MUST BE PROPERLY GROUNDED AND CONNECTED IN ACCORDANCE WITH LOCAL ELECTRICAL CODES. NOTE: THE OPERATOR SHOULD BE ON A SEPARATE FUSED LINE OF ADEQUATE CAPACITY.

ALL ELECTRICAL CONNECTIONS MUST BE MADE BY A QUALIFIED INDIVIDUAL.

WARNING

TO AVOID DAMAGE TO DOOR AND OPERATOR, MAKE ALL DOOR LOCKS INOPERATIVE. SECURE LOCK(S) IN "OPEN" POSITION.

IF THE DOOR LOCK NEEDS TO REMAIN FUNCTIONAL, INSTALL AN INTERLOCK SWITCH.

POWER WIRING

1. Be sure that the power supply is of the correct voltage, phase, frequency, and amperage to supply the operator. Refer to the operator nameplate on the cover.

2. Using the 1-1/16” dia conduit access hole as shown below, bring supply lines to the operator and connect wires to the terminals indicated on the WIRING CONNECTIONS DIAGRAM.

DO NOT TURN POWER ON UNTIL YOU HAVE FINISHED MAKING ALL POWER AND CONTROL WIRING CONNECTIONS AND HAVE COMPLETED THE LIMIT SWITCH ADJUSTMENT PROCEDURE.

IMPORTANT: THIS UNIT MUST BE PROPERLY GROUNDED. A GROUND SCREW IS SUPPLIED IN THE ELECTRICAL BOX FOR CONNECTION OF THE POWER SUPPLY GROUND WIRE. FAILURE TO PROPERLY GROUND THIS UNIT COULD RESULT IN ELECTRIC SHOCK AND SERIOUS INJURY.

ON THREE PHASE MACHINES ONLY!

Incorrect phasing of the power supply will cause the motor to rotate in the wrong direction (open when CLOSE button is pressed and vice-versa). To correct this, interchange any two of the incoming three phase power lines.

WARNING
Do Not Run Power & Control Wiring in the Same Conduit

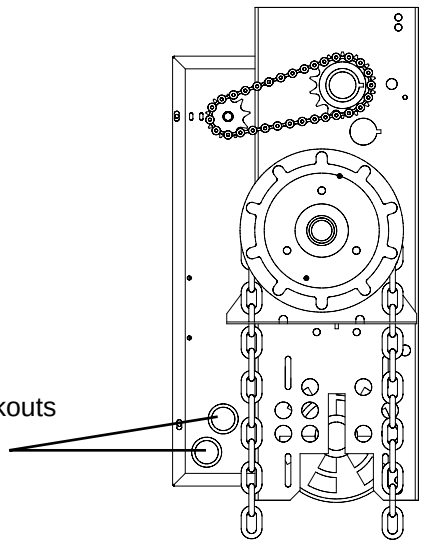

CONDUIT ACCESS

CONTROL WIRING

DETERMINE WIRING TYPE

Refer to the wiring diagram located on the inside cover the electrical box to determine the type of control wiring.

Standard C2 or B2 Wiring

Standard operators are shipped from the factory with jumper set for C2 wiring, which requires constant pressure on button to close the door. If momentary contact on close direction is desired (B2 wiring) you must include an entrapment protection device. See close control settings to the right.

Constant pressure on close (C2 wiring)

In the electrical enclosure, a RED wire was placed on terminal block #12. With this setting, the operator will require constant pressure on close control in order to keep door moving in the close direction.

Momentary contact on close (B2 wiring)

Move RED wire from terminal block #12 to terminal #2. The operator will require only momentary contact to close the door.

SPECIAL CONTROL WIRING

If your operator was shipped from the factory with non-standard control wiring or with optional accessories that require addition instructions, refer to the wiring diagram(s) indicated in the special control wiring data box. When a replacement wiring diagram is present, wiring diagrams in this manual will not apply. Refer only to the replacement wiring diagram for all connections.

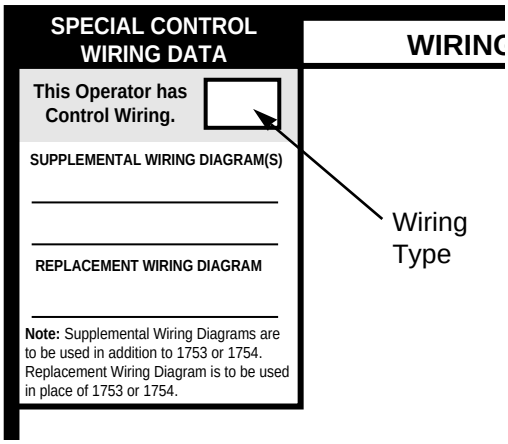

Wiring Diagram label on inside cover of electrical box

LOCATING THE CONTROL STATION

All operators are supplied with some type of control station. Generally a three button station (OPEN/CLOSE/STOP) is provided. A two-position key switch or control station (OPEN/CLOSE) may be added or substituted when requested at the time of order. Mount the control station near the door.

WARNING

INSTALL THE CONTROL STATION WHERE THE DOOR IS VISIBLE, BUT AWAY FROM THE DOOR AND ITS HARDWARE. IF CONTROL STATION CANNOT BE INSTALLED WHERE DOOR IS VISIBLE, OR IF ANY DEVICE OTHER THAN THE CONTROL STATION IS USED TO ACTIVATE THE DOOR, *A REVERSING EDGE MUST BE INSTALLED ON THE BOTTOM OF THE DOOR.* FAILURE TO INSTALL A REVERSING EDGE UNDER THESE CIRCUMSTANCES MAY RESULT IN SERIOUS INJURY OR DEATH TO PERSONS TRAPPED BENEATH THE DOOR.

MOUNT WARNING NOTICE

IMPORTANT: Mount WARNING NOTICE beside or below the push button station.

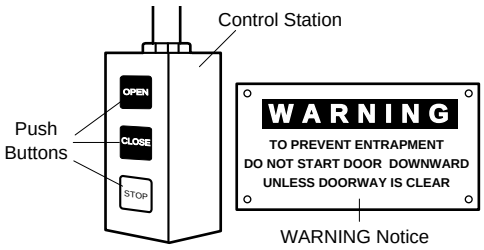

Radio Controls
On all models with type C2 control wiring, a terminal bracket marked R1 R2 R3 is located on the outside of the electrical enclosure. All standard radio control receivers (single channel residential type) may be mounted to this bracket. The operator will then open a fully closed door, close a fully open door, and reverse a closing door from the radio transmitter. However, for complete door control from a transmitter, a commercial three-channel radio set (with connections for OPEN/CLOSE/STOP) is recommended.

WARNING

DO NOT USE RADIO CONTROLS WITH YOUR OPERATOR UNLESS YOU HAVE INSTALLED SOME TYPE OF ENTRAPMENT PROTECTION DEVICE. THE USE OF RADIO CONTROLS PRESENTS POTENTIAL HAZARDS DUE TO THE USER'S ABILITY TO OPEN OR CLOSE THE DOOR WHEN OUT OF SIGHT OF THE DOOR. IN ADDITION, IF A SINGLE CHANNEL CONTROL IS USED, THE USER WILL NOT BE ABLE TO STOP THE DOOR FROM THE TRANSMITTER.

Additional Access Control Equipment
Locate any additional access control equipment as desired (but so that the door will be in clear sight of the person operating the equipment), and connect to the terminal block in the electrical enclosure as shown on the FIELD WIRING CONNECTIONS diagram. Any control with a normally (N.O.) isolated output contact may be connected in parallel with the OPEN button. More than one device may be connected in this manner. Use 16 gauge wire or larger for all controls. DO NOT USE THE CONTROL CIRCUIT TRANSFORMER (24VAC) IN THE OPERATOR TO POWER ANY ACCESS CONTROL EQUIPMENT OTHER THAN A STANDARD RESIDENTIAL TYPE RADIO RECEIVER.

External Interlock Switch
The operator has a terminal connection for an external interlock switch. This switch must be a normally closed (N.C.) two-wire device with a contact rating of at least 3 amps @ 24VAC. When such a switch is connected as shown on the FIELD WIRING CONNECTIONS diagram, the control circuit will be disabled when the switch is actuated, thereby preventing electrical operation of the door from the control devices.

CLUTCH ADJUSTMENT

1. Remove cotterpin from nut on the clutch shaft.

2. Back off clutch nut until there is very little tension on the clutch spring.

3. Tighten clutch nut gradually until there is just enough tension to permit the operator to move the door smoothly but to allow the clutch to slip if the door is obstructed. When the clutch is properly adjusted, it should generally be possible to stop the door by hand during travel.

4. Reinstall Cotterpin.

CAUTION: The adjustable friction clutch is NOT an automatic reversing device. An electric or pneumatic reversing edge can be added to bottom edge of door if desired.

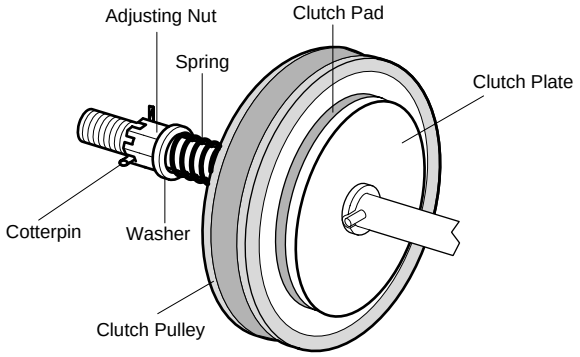

TEST THE SYSTEM

Turn on power. Test all controls and safety devices to make sure they are working properly. It will be necessary to refer back to page 6 for fine adjustment of the limit switches.

IMPORTANT NOTES:

- Do not leave operator power on unless all safety and entrapment protection devices have been tested and are working properly.
- Be sure you have read and understand all Safety Instructions included in this manual.
- Be sure the owner or person(s) responsible for operation of the door have read and understand the Safety Instructions, know how to electrically operate the door in a safe manner, and know how to use the manual disconnect operation of the door operating system.

WARNING

DO NOT PLACE HANDS OR TOOLS IN OR NEAR THE OPERATOR WHEN THE POWER IS ON OR WHEN TESTING CONTROL OR SAFETY DEVICES. ALWAYS DISCONNECT POWER BEFORE SERVICING OR ADJUSTING THE OPERATOR.

BRAKE ADJUSTMENT

A solenoid brake is an optional modification. If present, the brake is adjusted at the factory and should not need additional adjustment for the the life of the friction pad. If desired, a brake can also be field installed. To order a kit for field installation on an existing operator, call the parts and service department at 1-800-528-2806.

Replace friction pads when necessary. Refer to the illustration for identification of components for the solenoid type brake system.

Solenoid Brake System

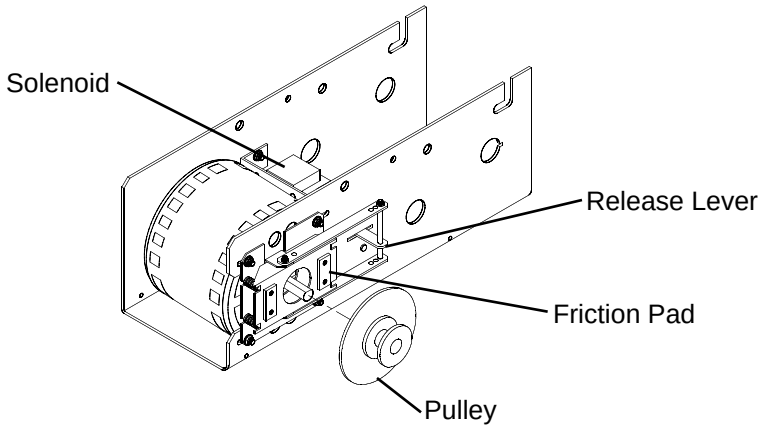

MAINTENANCE SCHEDULE

Check at the intervals listed in the following chart.

ITEM	PROCEDURE	EVERY 3 MONTHS	EVERY 6 MONTHS	EVERY 12 MONTHS
Drive Chain	Check for excessive slack. Check & adjust as required. Lubricate.*	●		✔
Sprockets	Check set screw tightness	●		✔
Clutch	Check & adjust as required		●	✔
Belt	Check condition & tension		●	✔
Fasteners	Check & tighten as required		●	✔
Manual Disconnect	Check & Operate		●	✔
Bearings & Shafts	Check for wear & lubricate	●		✔

❋ **Use SAE 30 Oil (Never use grease or silicone spray).**

✔ **Repeat ALL procedures.**

■ **Do not lubricate motor. Motor bearings are rated for continuous operation.**

■ **Do not lubricate clutch or V-belt.**

■ **Inspect and service whenever a malfunction is observed or suspected.**

■ **CAUTION: BEFORE SERVICING, ALWAYS DISCONNECT OPERATOR FROM POWER SUPPLY.**

HOW TO ORDER REPAIR PARTS

OUR LARGE SERVICE ORGANIZATION
SPANS AMERICA
INSTALLATION AND SERVICE INFORMATION
ARE AVAILABLE 6 DAYS A WEEK
CALL OUR TOLL FREE NUMBER - 1-800-528-2806
HOURS 7:00 TO 3:30 p.m. (Mountain Std. Time)
MONDAY Through SATURDAY

WHEN ORDERING REPAIR PARTS
PLEASE SUPPLY THE FOLLOWING INFORMATION:

PART NUMBER DESCRIPTION MODEL NUMBER

ADDRESS ORDER TO:

THE CHAMBERLAIN GROUP, INC.
Electronic Parts & Service Dept.
2301 N. Forbes Blvd., Suite 104
Tucson, AZ 85745

SCHEMATIC DIAGRAM

1754

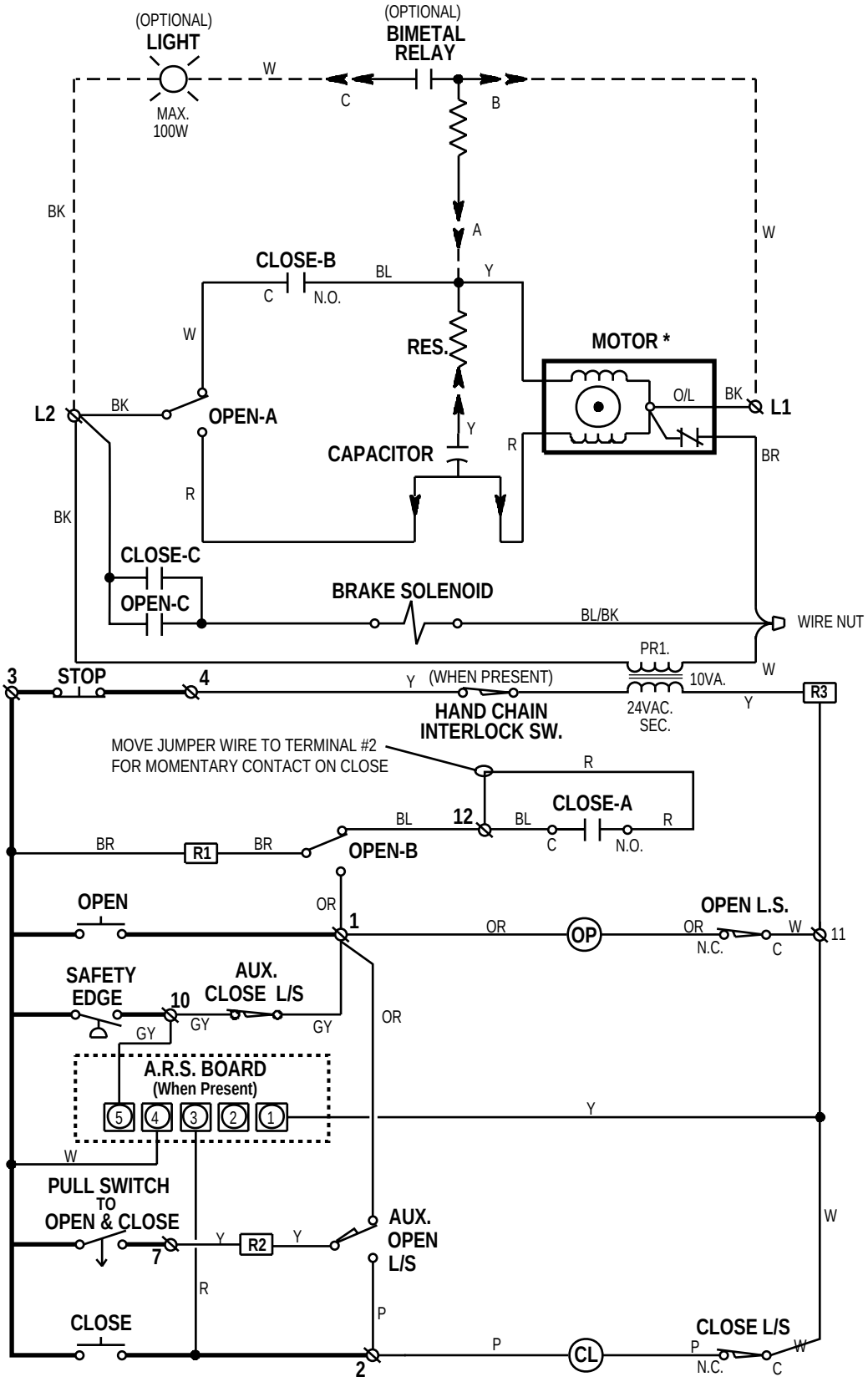

* TO REVERSE MOTOR ROTATION INTERCHANGE RED AND YELLOW MOTOR WIRES.

WIRING DIAGRAM

1754

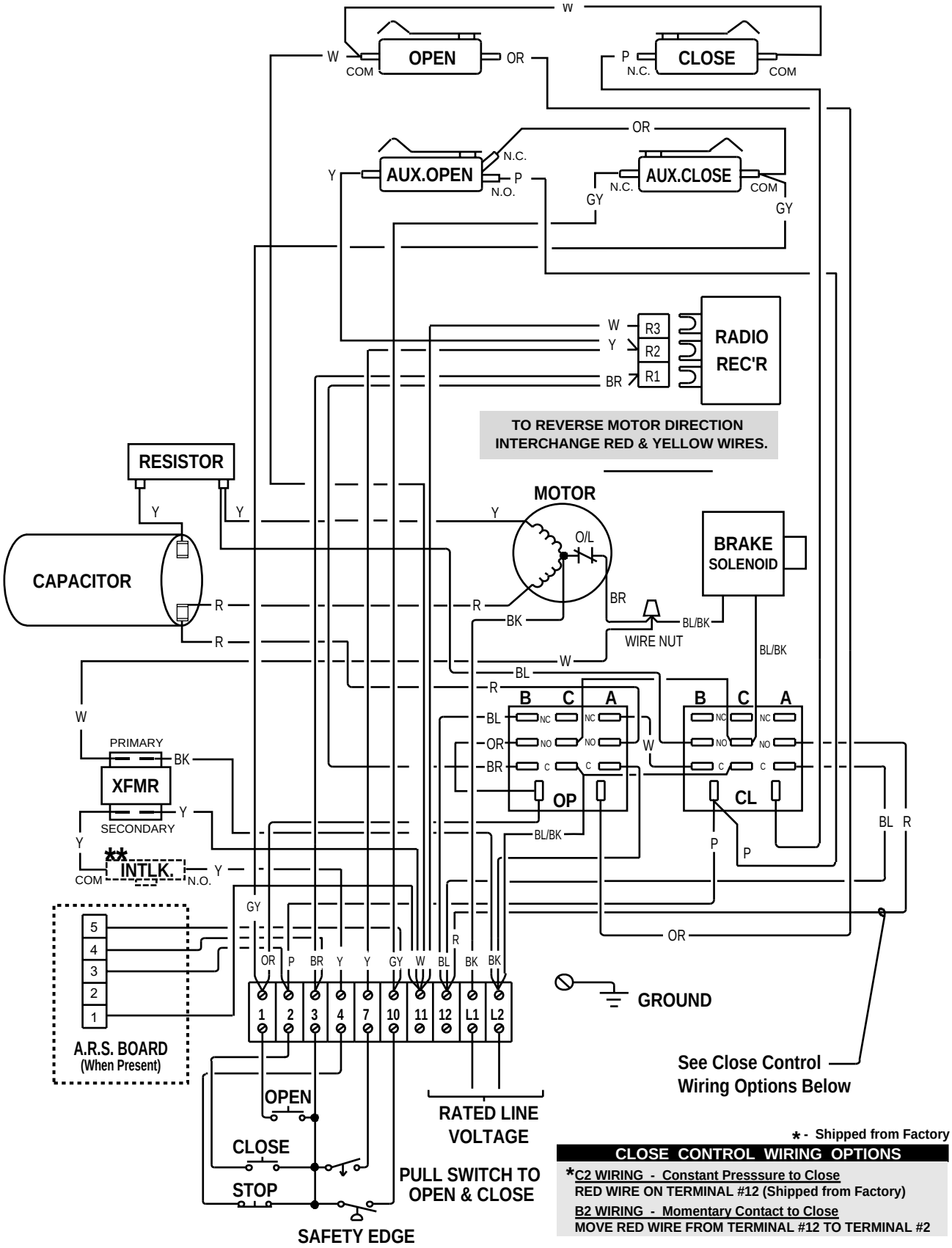

* - Shipped from Factory

CLOSE CONTROL WIRING OPTIONS

*C2 WIRING - Constant Presssure to Close
RED WIRE ON TERMINAL #12 (Shipped from Factory)

B2 WIRING - Momentary Contact to Close
MOVE RED WIRE FROM TERMINAL #12 TO TERMINAL #2

** - INTERLOCK SWITCH (WHEN SUPPLIED) WIRED N.O. HELD CLOSED.

ELECTRICAL BOX - ILLUSTRATED PARTS

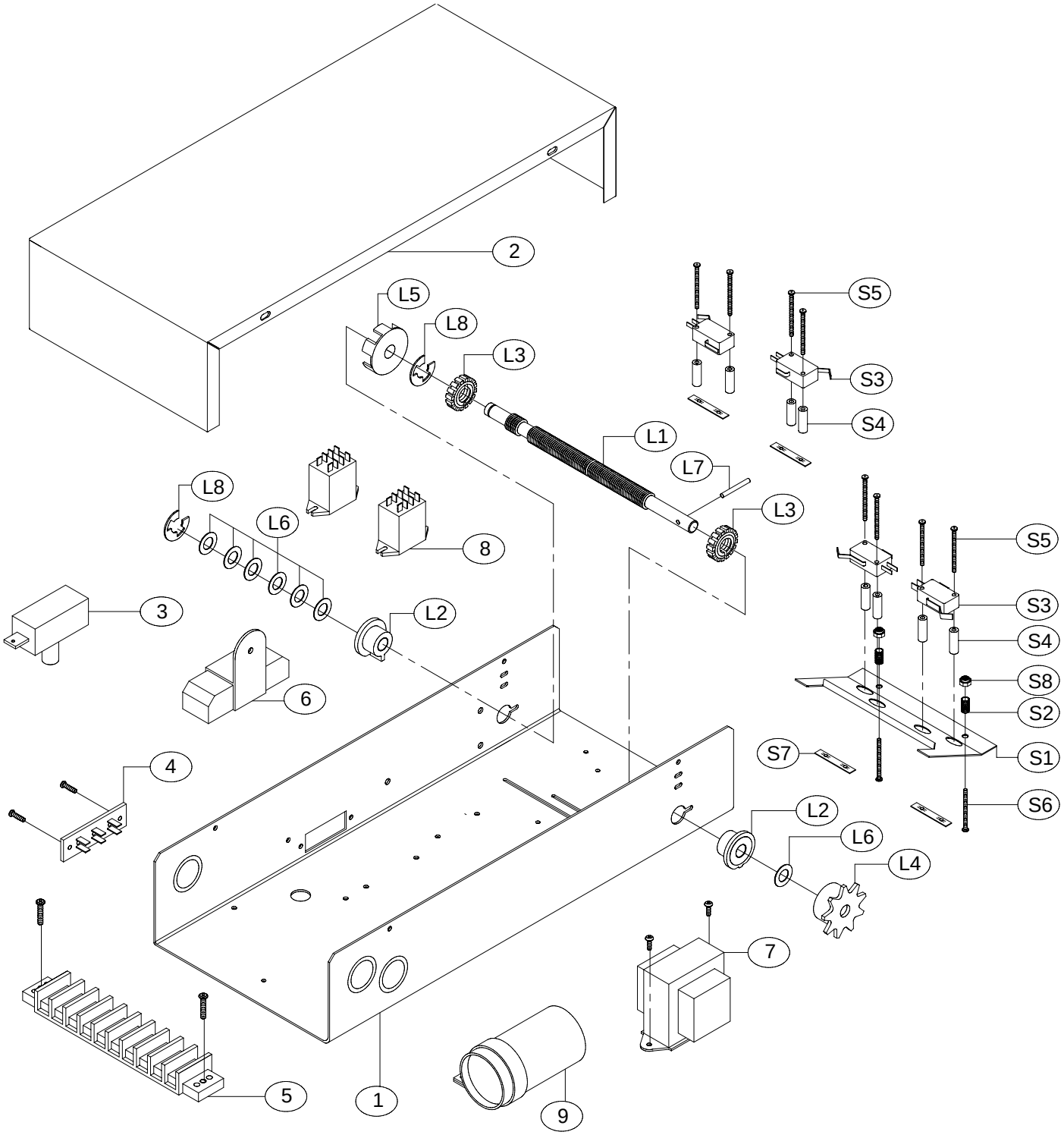

REPLACEMENT PART KITS

Below are replacement kits available for your operator. For replacement of electrical box, motor or brake components be sure to match model number of your unit to kit number below to ensure proper voltage requirements. Optional modifications and/or accessories included with your operator may add or remove certain components from these lists. Please consult a parts and service representative regarding availability of individual components of kits specified below. Refer to page 11 for all repair part ordering information.

Complete Electrical Box Service Kits

K-MJ5011	Model MJ5011, 115V
K-MJ5025	Model MJ5025, 230V
K-MH5011R	Model MH5011R, 115V RH
K-MH5011L	Model MH5011L, 115V LH
K-MH5025R	Model MH5025R, 230V RH
K-MH5025L	Model MH5025L, 230V LH
K-HMJ5011R	Model HMJ5011R, 115V RH
K-HMJ5011L	Model HMJ5011L, 115V LH
K-HMJ5025R	Model HMJ5025R, 230V RH
K-HMJ5025L	Model HMJ5025L, 230V LH

Electrical Box Sub-Assemblies

K72-12487	Limit Shaft Assembly
K75-12493	Limit Switch Assembly

Motor Kits

K20-5150LD	115V Models
K20-5250LD	230 V Models

Shaft Assemblies

K72-12589	Clutch Shaft Assembly, MJ
K72-12590	Clutch Shaft Assembly, MH
K72-12591	Clutch Shaft Assembly, HMJ
K72-12592	Output Shaft Assembly

Brake Kits

K75-12492	Brake Assembly Service Kit, (115V)
K75-12494	Brake Assembly Service Kit, (230V)

Disconnect Assembly Kits

K75-12587	Disconnect Assembly Service Kit, MJ
K75-12588	Disconnect Assembly Service Kit, MH

*** COMPLETE ELECTRICAL BOX KITS**

1	10-10315	MT Electrical Box	1
2	10-10316	MT Electrical Box Cover	1
3	23-10916	SPDT Interlock Switch	1
4	42-10040	Terminal Assembly 3 Lug	1
5	42-110	10 Position Terminal Block	1
6	29-2	Resistor, 2ohm	1
7	(See Var. Comp.)	Transformer	1
8	(See Var. Comp.)	Relay, 24V	2
9	(See Var. Comp.)	Motor Capacitor	1

* Electrical Box Kits include parts from K72-12487 and K75-12493

K75-12493 LIMIT SWITCH ASSEMBLY KIT

Item	P/N	Descrition	Qty
S1	10-10318	Depress Plate	1
S2	18-10036	Spring, Depress Plate	2
S3	23-10041	Limit Switch	4
S4	31-10043	Standoff, Limit Switch	8
S5	82-PX0419	Screw, #4-40 x 1-3/8” Pan Hd Phil	8
S6	82-PX0616	Screw, #6-32 x 1” Pan Hd Phil	2
S7	84-DT-04	Nut, Double Tinnerman	4
S8	84-LN-06	Locknut, #6-32 Nylon Hex	2

K72-12487 LIMIT SHAFT ASSEMBLY KIT

Item	P/N	Description	Qty
L1	11-10321	MT Limit Shaft	1
L2	12-10028	Flange Bearing 3/8” I.D.	2
L3	13-10024	Limit Nut	2
L4	15-48B9A1	Sprocket 48B9 x 3/8” Powder Metal	1
L5	29-10344	RPM Rotating Cup	1
L6	80-10026	Washer, Shim 3/8” I.D. x .010 THK.	7
L7	86-RP04-100	Rollpin 1/8 x 1” Long	1
L8	87-E-075	E Ring, 3/8”	2

VARIABLE COMPONENT KITS

PART NUMBER	DESCRIPTION	MJ5011	MJ5025	MH5011R	MH5011L	MH5025R	MH5025L	HMJ5011R	HMJ5011L	HMJ5025R	HMJ5025L
K13-10024	Limit Nut, (set of 2)	●	●	●	●	●	●	●	●	●	●
K23-10041	Limit Switch	●	●	●	●	●	●	●	●	●	●
K29-2	Resistor, 2 Ohm	●	●	●	●	●	●	●	●	●	●
K21-10340	Transformer, 115V	●		●	●			●	●		
K21-5230	Transformer, 230V		●			●	●			●	●
K29-10338	Capacitor, 70MFD	●		●	●			●	●		
K29-12110	Capacitor, 20MFD		●			●	●			●	●
K24-24-6	Relay, 3PDT	●	●	●	●	●	●	●	●	●	●

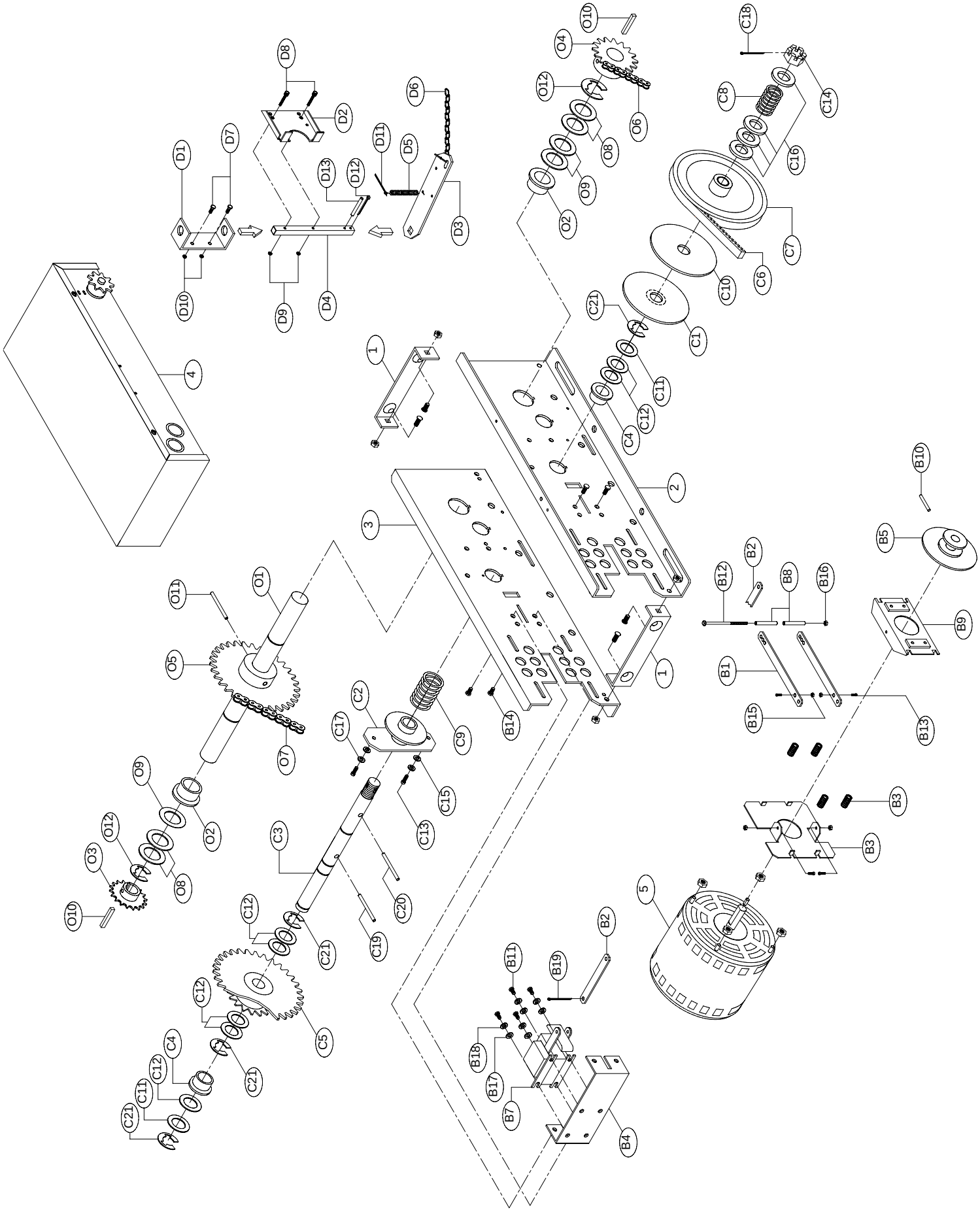
D8
D2
D6
D7
D1
D11
D5
D13
D12
D3
D10
D9
D4
O10
O4
O12
O6
O8
O9
O2
C18
C14
C8
C16
C7
C6
C10
C1
C21
C11
C12
C4
4
1
2
3
B10
B5
B2
B12
B8
B16
B9
B1
B15
B13
B14
O11
O1
O5
O7
C2
C17
C9
C15
C13
C3
C20
C19
C21
C12
C5
O9
O2
O12
O3
O8
O10
B3
B3
5
B2
B11
B19
B18
B17
B7
B4

REPAIR PARTS LIST – MODEL MJ

Refer to the parts lists below for replacement kits available for your operator. If optional modifications and/or accessories are included with your operator, certain components may be added or remove from these lists. Individual components of each kit may not be available. Please consult a parts and service representive regarding availability of individual components. Refer to page 11 for all repair part ordering information.

INDIVIDUAL PARTS

ITEM	PART #	DESCRIPTION	QTY
1	10-10030	Frame Spacer	2
2	10-10713	Frame, Right Side	1
3	10-10714	Frame, Left Side	1
4	See Page 15	Electrical Box Replacement Kits	1
5	See Page 15	Motor Replacement Kits	1

K72-12589 CLUTCH SHAFT ASSEMBLY KIT

ITEM	PART #	DESCRIPTION	QTY
C1	10-10166	Clutch Plate	1
C2	10-10712	Disconnect Plate	1
C3	11-10706	Clutch Shaft	1
C4	12-10029	Bearing 3/4” I.D.	2
C5	15-10717	Sprocket Assy, 48B10/41A24	1
C6	16-4L290	Cogged Belt 4L290	1
C7	17-10336	4L Pulley 7” O.D.	1
C8	18-10164	Spring, Clutch	1
C9	18-10711	Spring, Disconnect	1
C10	39-10167	Clutch Disc	1
C11	80-10022	Shim Washer, Thick	2
C12	80-10023	Shim Washer, Thin	7
C13	82-SH10-06S	Screw, #10-32 x 5/16 Socket HH	2
C14	84-SH-76	Nut, 3/4-16 Castle	1
C15	85-FW-10	Flatwasher #10	2
C16	85-FW-75	Flatwasher 3/4”	4
C17	85-LS-10	Lock Washer, #10 Split Ring	2
C18	86-CP05-108	Cotterpin 5/32 x 1-1/2” Long	1
C19	86-RP08-102	Rollpin 1/4 x 1-1/8” Long	1
C20	86-RP08-200	Rollpin 5/16 x 2” Long	1
C21	87-E-075	E Ring 3/4” Plated	4

K72-12592 OUTPUT SHAFT ASSEMBLY KIT

ITEM	PART #	DESCRIPTION	QTY
O1	11-10705	Output Shaft	1
O2	12-10715	Flange Bearing 1” I.D.	2
O3	15-41B14LGF	Sprocket, #41B14 x 1” Bore	1
O4	15-48B18LGE	Sprocket, #48B18 x 1” Bore	1
O5	15-48B32LXX	Sprocket, #48B32 x 1” Bore	1
O6	19-48027M	Chain, #48 x 27 Links W/Master	1
O7	19-48043M	Chain, #48 x 43 Links W/Master	1
O8	80-206-10	Washer 1” I.D. x 1/8 Thick	4
O9	80-206-11	Washer 1” I.D. x 1/16 Thick	3
O10	80-207-19	Key 1/4” x 1-1/2” Long	2
O11	86-RP10-200	Rollpin 5/16 x 2”	1
O12	87-E-100	E Ring 1” Plated	2

K75-12587 MJ DISCONNECT SERVICE KIT

ITEM	PART #	DESCRIPTION	QTY
D1	10-10707	Disconnect Support Bracket	1
D2	10-10708	Yoke	1
D3	10-10709	Disconnect Lever	1
D4	11-10710	Disconnect Shaft	1
D5	18-10178	Tension Spring	1
D6	19-8A-12	12ft. Of Sash Chain	1
D7	82-HN25-12	Screw, 1/4-20 x 3/4 Hex Head	2
D8	82-SH10-12	Screw, #10-32 x 3/4 Socket HH	2
D9	84-FN-10	Nut, #10-32 Serrated Flange	2
D10	84-JH-25	Jam Nut, #1/4-20 Hex	2
D11	86-CP04-112	Cotterpin 1/8 x 1-3/4 Long (ZP)	1
D12	86-CP05-108	Cotterpin 5/32 x 1-1/2 Long	1
D13	86-RP04-100	Rollpin 1/8 x 1” Long	1

BRAKE ASSEMBLY KITS

KIT PART #	FOR	OPERATOR(S)
K75-12492		115 Volt Units
K75-12494		230 Volt Units

ITEM	PART #	DESCRIPTION	QTY
B1	10-10354	Brake Release Arm	2
B2	10-10355	Solenoid Link	1
B3	10-10356	Brake Mounting Plate	1
B4	10-10357	Solenoid Bracket	1
B5	17-10363	Pully & Disc Assembly	1
B6	18-10362	Comp. Spring .360 O.D. x .045WD	4
B7	22-120	115V Brake Solenoid	1
	22-240	230V Brake Solenoid	1
B8	31-10364	Spacer .20 I.D. x .260 OD x 1	2
B9	75-10359	Brake Plate Pad Assy.	1
B10	82-NH25-03	1/4-20 x 3/16 S.S. Knurled Cup	1
B11	82-PX10-06T	Phillips Pan Self Tap Type ZP	4
B12	82-PX10-28	10-32 x 3” SLTD PN HD ZP	1
B13	82-SH06-065	SH Cap Screw #6-32 W/Knrld Cup	4
B14	83-HS08-04	Sheet Metal Screw AB Hex Slot	4
B15	84-LH-06	Locknut #6-32	2
B16	84-LH-10	Nylon Locknut 10-32 ZP	1
B17	85-FW-10	Flatwasher #10 ZP	4
B18	85-LS-10	Lock Washer ZP	4
B19	86-CP05-108	Cotterpin 5/32” x 1-1/2” Long	1

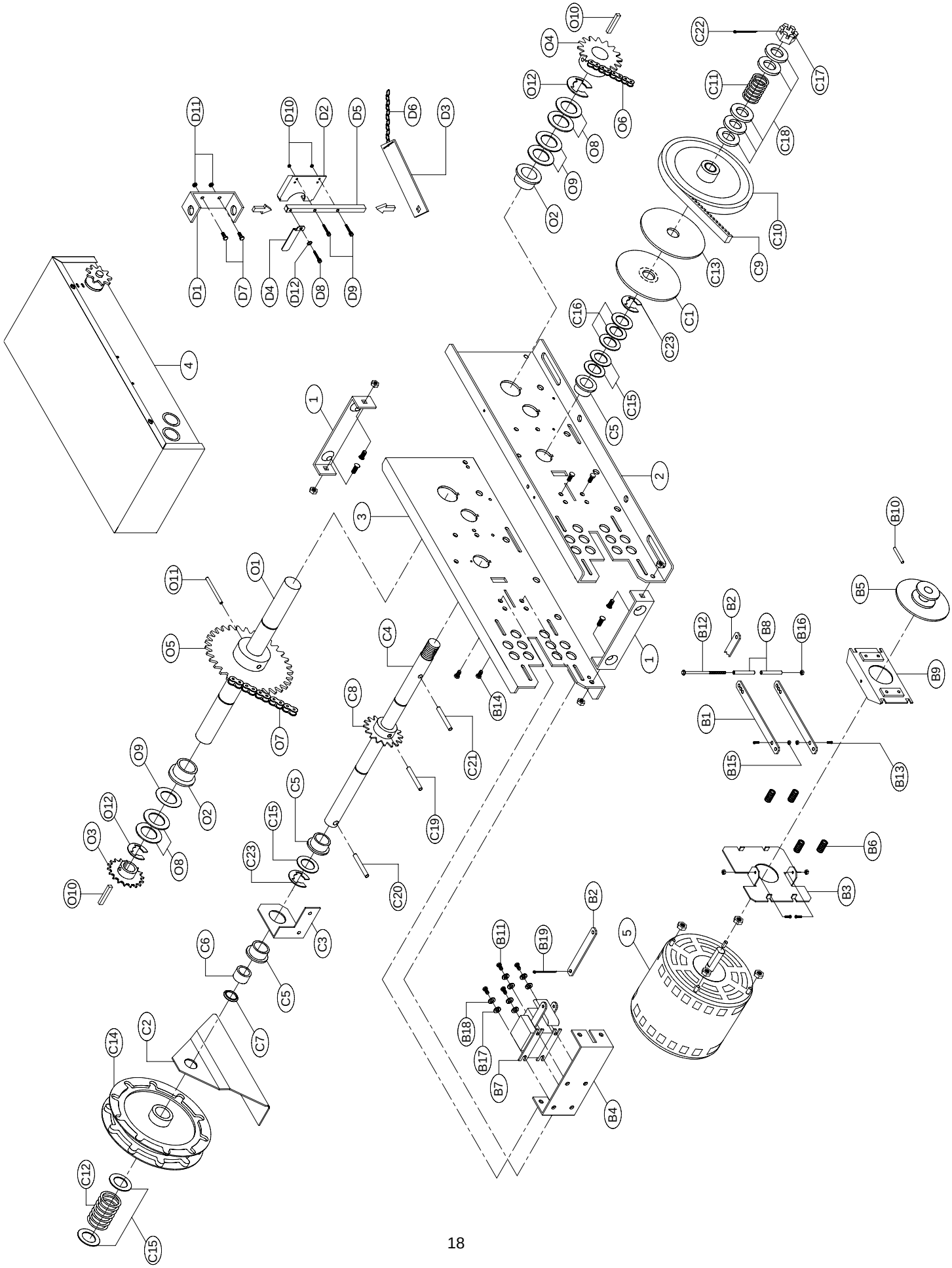
D11
D10
D2
D5
D6
D3
D1
D7
D4
D12
D8
D9
O10
O4
O12
O6
O8
O9
O2
C22
C17
C11
C18
C10
C9
C13
C1
C23
C16
C15
C5
4
1
2
3
1
O11
O1
O5
O7
C4
C8
B14
C21
C19
O9
O2
O12
O3
O8
O10
C5
C15
C23
C20
C3
C6
C5
C7
C2
C14
C12
C15
B10
B5
B2
B12
B8
B16
B9
B1
B15
B13
B6
B3
B2
B11
B19
B18
B17
B7
B4
5

REPLACEMENT PARTS LIST – MODEL MH

Refer to the parts lists below for replacement kits available for your operator. If optional modifications and/or accessories are included with your operator, certain components may be added or remove from these lists. Individual components of each kit may not be available. Please consult a parts and service representative regarding availability of individual components. Refer to page 11 for all repair part ordering information.

INDIVIDUAL PARTS

ITEM	PART #	DESCRIPTION	QTY
1	10-10030	Frame Spacer	2
2	10-10713	Frame, Right Side	1
3	10-10714	Frame, Left Side	1
4	See Page 15	Electrical Box Replacement Kit	1
5	See Page 15	Motor Replacement Kit	1

K72-12590 CLUTCH SHAFT ASSEMBLY KIT

ITEM	PART #	DESCRIPTION	QTY
C1	10-10166	Clutch Plate	1
C2	10-10882	Chain Guide	1
C3	10-10985	Release Holder	1
C4	11-10987	Clutch Shaft	1
C5	12-10029	Bearing, 3/4” I.D.	3
C6	12-10882	Bushing .753 ID x .625 Long	1
C7	12-10883	NY Liner Bearing	1
C8	15-48B10GXX	Sprocket, 48B10 3/4” Bore	1
C9	16-4L290	Cogged Belt, 4L290	1
C10	17-10336	Pulley 7” OD	1
C11	18-10164	Clutch Spring, (1/2 @ 3/4HP)	1
C12	18-10984	Compression Spring	1
C13	39-10167	Clutch Pad	1
C14	75-10884	Chain Wheel Assembly	1
C15	80-10022	Spacer .80 I.D. x 1.125 O.D. x .050	5
C16	80-10883	Spacer .753 I.D. x 2.50 O.D. x 1/8	3
C17	84-SH-76	Hex Castle Nut 3/4 x 16 ZP	1
C18	85-FW-75	Washer 3/4 I.D. x 1-1/2 O.D. x .125	5
C19	86-RP10-200	Roll Pin 5/16 x 2”	1
C20	86-RP08-102	Roll Pin 1/4 x 1-1/8”	1
C21	86-RP08-200	Roll Pin 1/4 x 2”	1
C22	86-CP05-108	Cotterpin, 5/32” x 1-1/2”	1
C23	87-E-075	E Ring 3/4” ID	2

K72-12592 OUTPUT SHAFT ASSEMBLY KIT

ITEM	PART #	DESCRIPTION	QTY
O1	11-10705	Output Shaft	1
O2	12-10715	Flange Bearing 1” I.D.	2
O3	15-41B14LGF	Sprocket, #41B14 x 1” Bore	1
O4	15-48B18LGE	Sprocket, #48B18 x 1” Bore	1
O5	15-48B32LXX	Sprocket, #48B32 x 1” Bore	1
O6	19-48027M	Chain, #48 x 27 Links W/Master	1
O7	19-48043M	Chain, #48 x 43 Links W/Master	1
O8	80-206-10	Washer 1” I.D. x 1/8 Thick	4
O9	80-206-11	Washer 1” I.D. x 1/16 Thick	3
O10	80-207-19	Key 1/4” x 1-1/2” Long	2
O11	86-RP10-200	Rollpin 5/16 x 2”	1
O12	87-E-100	E Ring 1” Plated	2

K75-12588 MH DISCONNECT ASSEMBLY KIT

ITEM	PART #	DESCRIPTION	QTY
D1	10-10707	Disconnect Support Bracket	1
D2	10-10708	Yoke	1
D3	10-10875	Disconnect Lever	1
D4	10-10988	Interlock Switch Actuator	1
D5	11-10982	Disconnect Shaft	1
D6	19-8A-12	Sash Chain, 12 Foot Long	1
D7	82-HN25-12	Hex Cap Screw, 1/4-20 x 3/4”	2
D8	82-SH10-06S	Socket Head Screw, #10-32 x 3/8”	1
D9	82-SH10-14	Socket Head Screw, #10-32 x 7/8”	2
D10	84-FN-10	Serrated Flange Nut, #10-32	2
D11	84-FN-25	Serrated Flange Nut, 1/4-20	2
D12	85-LS-10	Lockwasher, #10-32	1

BRAKE ASSEMBLY KITS

KIT PART #	FOR	OPERATOR(S)
K75-12492		115 Volt Units
K75-12494		230 Volt Units

See Page 17 for Brake Kit Parts List

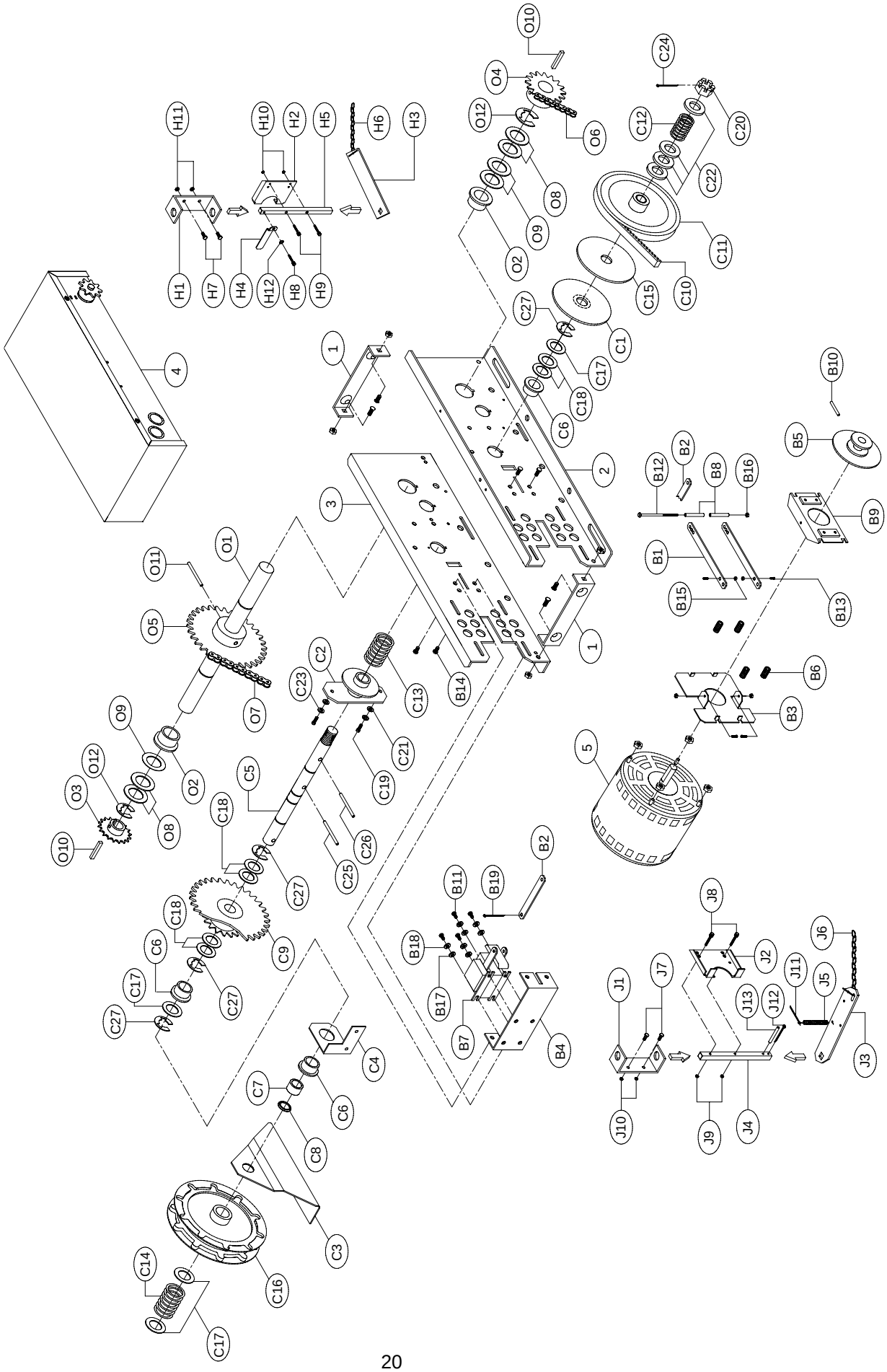
H11
H10
H2
H5
H6
H3
H1
H7
H4
H12
H8
H9
O10
O4
O12
O6
O8
O9
O2
C24
C12
C20
C22
C11
C10
C15
C27
C1
C17
C18
C6
1
4
2
3
B10
B5
B2
B12
B8
B16
B9
B1
B15
B13
O1
O11
O5
O7
C2
C23
C13
B14
B6
B3
O9
O12
O3
O8
O10
C21
C19
5
C5
C18
C26
C25
C27
C9
B2
B11
B19
B18
B17
B7
B4
J8
J6
J2
J11
J5
J1
J7
J13
J12
J3
J10
J9
J4
C4
C7
C8
C3
C14
C16
C17

REPLACEMENT PARTS LIST – MODEL HMJ

Refer to the parts lists below for replacement kits available for your operator. If optional modifications and/or accessories are included with your operator, certain components may be added or remove from these lists. Individual components of each kit may not be available. Please consult a parts and service representative regarding availability of individual components. Refer to page 11 for all repair part ordering information.

INDIVIDUAL PARTS

ITEM	PART #	DESCRIPTION	QTY
1	10-10030	Frame Spacer	2
2	10-10713	Frame, Right Side	1
3	10-10714	Frame, Left Side	1
4	See Page 15	Electrical Box Replacement Kit	1
5	See Page 15	Motor Replacement Kit	1

K75-12587 MJ DISCONNECT ASSEMBLY KIT

ITEM	PART #	DESCRIPTION	QTY
J1	10-10707	Disconnect Support Bracket	1
J2	10-10708	Yoke	1
J3	10-10709	Disconnect Lever	1
J4	11-10710	Disconnect Shaft	1
J5	18-10178	Tension Spring	1
J6	19-8A-12	12ft. Of Sash Chain	1
J7	82-HN25-12	Screw, 1/4-20 x 3/4 Hex Head	2
J8	82-SH10-12	Screw, #10-32 x 3/4 Socket HH	2
J9	84-FN-10	Nut, #10-32 Serrated Flange	2
J10	84-JH-25	Jam Nut, #1/4-20 Hex	2
J11	86-CP04-112	Cotterpin 1/8 x 1-3/4 Long (ZP)	1
J12	86-CP05-108	Cotterpin 5/32 x 1-1/2 Long	1
J13	86-RP04-100	Rollpin 1/8 x 1” Long	1

K75-12588 MH DISCONNECT ASSEMBLY KIT

ITEM	PART #	DESCRIPTION	QTY
H1	10-10707	Disconnect Support Bracket	1
H2	10-10708	Yoke	1
H3	10-10875	Disconnect Lever	1
H4	10-10988	Interlock Switch Actuator	1
H5	11-10982	Disconnect Shaft	1
H6	19-8A-12	Sash Chain, 12 Foot Long	1
H7	82-HN25-12	Hex Cap Screw, 1/4-20 x 3/4”	2
H8	82-SH10-06S	Socket Head Screw, #10-32 x 3/8”	1
H9	82-SH10-14	Socket Head Screw, #10-32 x 7/8”	2
H10	84-FN-10	Serrated Flange Nut, #10-32	2
H11	84-FN-25	Serrated Flange Nut, 1/4-20	2
H12	85-LS-10	Lockwasher, #10-32	1

BRAKE ASSEMBLY KITS

KIT PART #	FOR	OPERATOR(S)
K75-12492		115 Volt Units
K75-12494		230 Volt Units

See Page 17 for Brake Kit Parts List

K72-12591 CLUTCH SHAFT ASSEMBLY KIT

ITEM	PART #	DESCRIPTION	QTY
C1	10-10166	Clutch Plate	1
C2	10-10712	Disconnect Plate	1
C3	10-10882	Chain Guide	1
C4	10-10985	Release Holder	1
C5	11-10706	Clutch Shaft	1
C6	12-10029	Bearing, 3/4” I.D.	3
C7	12-10882	Bushing .753 ID x .625 Long	1
C8	12-10883	NY Liner Bearing	1
C9	15-10717	Sprocket Assy., 48B10/41A24	1
C10	16-4L290	Cogged Belt 4L290	1
C11	17-10336	Pulley 7” OD	1
C12	18-10164	Clutch Spring, (1/2 @ 3/4HP)	1
C13	18-10711	Spring, Disconnect	1
C14	18-10984	Compression Spring	1
C15	39-10167	Clutch Pad	1
C16	75-10884	Chain Wheel Assembly	1
C17	80-10022	Spacer .80 I.D. x 1.125 O.D. x .050	4
C18	80-10023	Spacer .80 I.D. x 1.125 O.D. x .010	6
C19	82-SH10-06S	Screw, #10-32 x 3/8 Socket HH	2
C20	84-SH-76	Hex Castle Nut 3/4 x 16 ZP	1
C21	85-FW-10	Flatwasher #10	2
C22	85-FW-75	Washer 3/4 I.D. x 1-1/2 O.D. x .125	4
C23	85-LS-10	Lock Washer, #10 Split Ring	2
C24	86-CP05-108	Cotterpin, 5/32 x 1-1/2” Long	1
C25	86-RP08-102	Rollpin 1/4 x 1-1/8” Long	1
C26	86-RP08-200	Rollpin 5/16 x 2” Long	1
C27	87-E-075	E-Ring 3/4” Plated	4

K72-12592 OUTPUT SHAFT ASSEMBLY KIT

ITEM	PART #	DESCRIPTION	QTY
O1	11-10705	Output Shaft	1
O2	12-10715	Flange Bearing 1” I.D.	2
O3	15-41B14LGF	Sprocket, #41B14 x 1” Bore	1
O4	15-48B18LGE	Sprocket, #48B18 x 1” Bore	1
O5	15-48B32LXX	Sprocket, #48B32 x 1” Bore	1
O6	19-48027M	Chain, #48 x 27 Links W/Master	1
O7	19-48043M	Chain, #48 x 43 Links W/Master	1
O8	80-206-10	Washer 1” I.D. x 1/8 Thick	4
O9	80-206-11	Washer 1” I.D. x 1/16 Thick	3
O10	80-207-19	Key 1/4” x 1-1/2” Long	2
O11	86-RP10-200	Rollpin 5/16 x 2”	1
O12	87-E-100	E Ring 1” Plated	2

OPERATOR NOTES

OPERATOR NOTES

CONTROL CONNECTION DIAGRAM

IMPORTANT NOTES:

1) The 3-Button Control Station provided must be connected for operation.
2) If a STOP button is not used, a jumper must be placed between termianls 3 and 4.
3) Auxiliary control equipment may be any normally open two wire device such as pullswitch, single button, loop detector, card key or such device.

ATTENTION ELECTRICIAN:
USE 16 GAUGE OR HEAVIER WIRE FOR ALL CONTROL CIRCUIT WIRING.

3 BUTTON STATION or 3 POSITION KEYSWITCH w/ SPRING RETURN TO CENTER AND STOP BUTTON

STANDARD

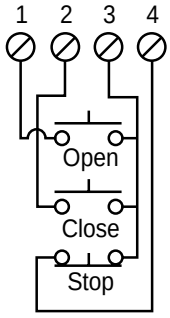

ALL CONTROL WIRING TYPES

2 OR MORE

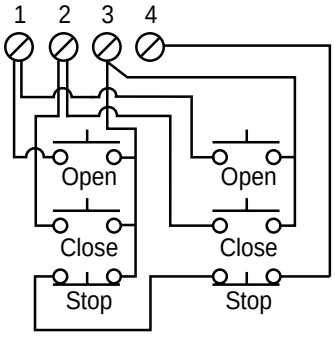

ALL CONTROL WIRING TYPES

KEY LOCKOUT

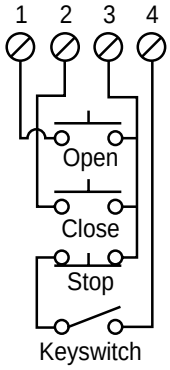

ALL CONTROL WIRING TYPES

2 BUTTON STATION or 3 POSITION KEYSWITCH w/ SPRING RETURN TO CENTER

STANDARD

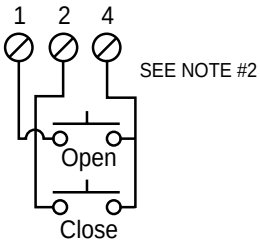

ALL CONTROL WIRING TYPES

2 OR MORE

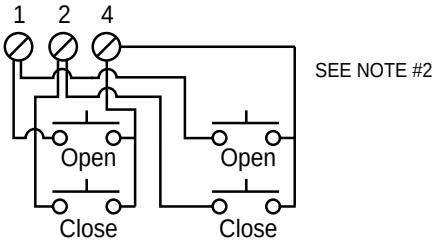

ALL CONTROL WIRING TYPES

1 BUTTON STATION or ANY AUXILIARY DEVICE

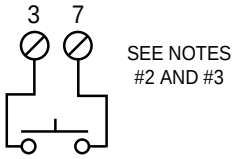

OPEN / CLOSE

B2 or T1 WIRING TYPES ONLY

SENSING DEVICE TO REVERSE OR STOP

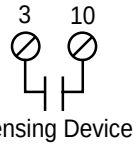

ALL CONTROL WIRING TYPES

RESIDENTIAL RADIO CONTROLS

*OPEN TIMER TO CLOSE

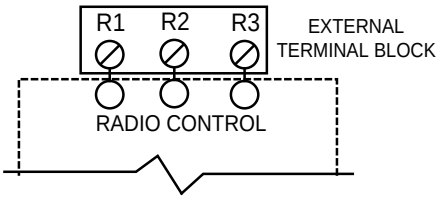

ALL CONTROL WIRING TYPES
*T1 WIRING - RADIO TO OPEN ONLY

TIMER TO CLOSE w/ WARNING LIGHT

Warning Light will activate 15 sec. before door closes.

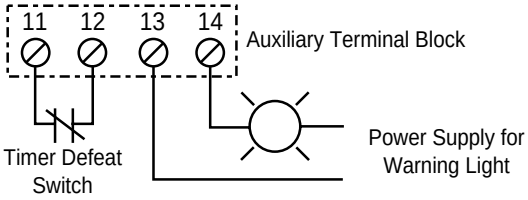

T1 CONTROL WIRING ONLY

EXTERNAL INTERLOCK

Remove Jumper When Interlock is Used

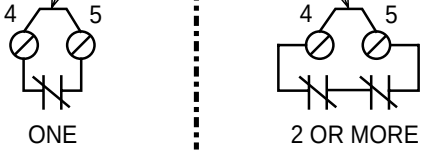

ONE

2 OR MORE

ALL CONTROL WIRING TYPES

01-10701L